

NMC ENERGY

WBS4 TECH BITE

NOVEMBER 2026

nmcenergy.com

commercial@nmcenergy.com

NMC Energy at a glance

We have a full multi-discipline team:
Technical safety | Process | Mechanical | Piping | Structural | E&I | Construction

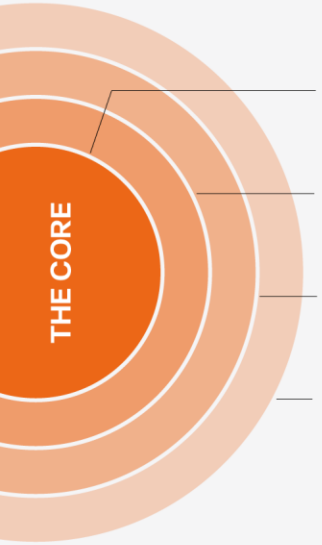

1. Consultancy
2. EPC Delivery
3. Fully Integrated Delivery
4. Specialist Partner to Operators & Tier 1s

1. FEED & detailed engineering
2. Procurement & logistics
3. Construction management
4. Offshore execution
5. Commissioning



Konstantin Nazaruk
Chief Executive Officer



Debbi Pearson
Strategy and Growth Consultant



Craig Matthew
Project & Operations Director

NMC Energy service support



1	2	3	4	5	6	7	8	9	10	11
Project Management	Post-CoP Running Costs	Well Decommissioning	Facilities & Pipelines Permanent Isolation and Cleaning	Topsides Preparation	Topsides Removal	Substructure Removal	Topsides and Sub-structure Onshore Disposal	Subsea Infrastructure	Site Remediation	Post-Decommissioning Monitoring
In House	Partner / In House	Wellsafe Partner	In House	In House	In House	In House	In House	In House	In House	To Come

WBS 4 Facilities & Pipelines Permanent Isolation & Cleaning

Decommissioning mindset | Predictable delivery | Leaner, smarter integrated solutions | Technology & AI-enabled delivery | More than just EPC, true specialists in decommissioning

What is WBS4? - Key components

WBS 4 can be summarised as:

'Ability to leave the platform/facilities in a condition suitable and safe for subsequent dismantlement and removal'

Planning
Multi-discipline Engineering Team– Tech Safety, Process, E&I, Piping

Design & delivery
Decom Expertise + Local Operations Knowledge
Data Sourcing

Early Phases
Redundant Plant Segregation
Late Life Modifications

Boundary Isolations
P&A Fluids
Power Mods
NavAids/Monitoring

Process EDC
Parallel to P&A
Subsea/Pipelines

Vessel Isolations / Inspections
EDC of Process & non-utilized utility systems

Declassification & Early Rundown
Cease Production
Complete Final P&A

Conductor removal
Future Access Works
Confirm status Declassify

Final Rundown & Downman
Systems Power Down and Depart

Final De-energise
Navaids live
Leave asset
Handover Data

The thread that runs through WBS4 is the **information challenge**

The information challenge

Kicking off WBS4 .....

- New engineering teams unfamiliar with the asset
- Organisational challenges within operators
- Reducing operational spend with production decline
- Capacity of operational organisations to support decom
- The decommissioning deferment dynamic

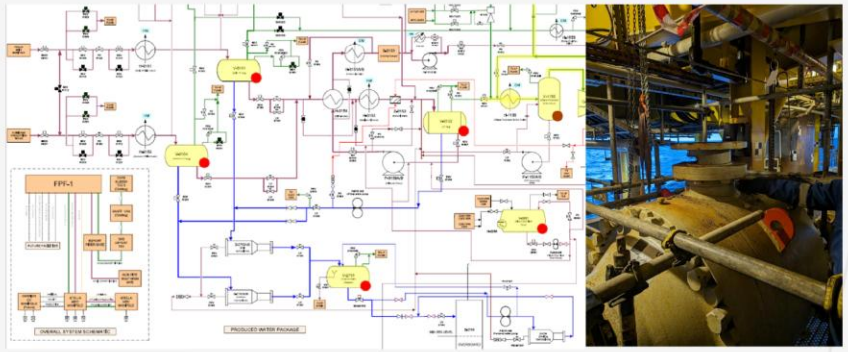

The environment is complex, uncertain **and often stressed**

1. GATHER & REVIEW DATA – SURVEY THE SITE – UNDERSTAND THE LIFE CYCLES
2. DRAFT STRATEGY & WIDELY REVIEW
3. FOCUSSED STUDY & CONFIRM FINAL STRATEGY
4. DETAILED ENGINEERING/PROCUREMENT
5. COMPLETE MODIFICATIONS / SUPPORT P&A
6. SEQUENTIAL PATH THROUGH RUNDOWN

Decommissioning mindset | Predictable delivery | Leaner, smarter integrated solutions | Technology & AI-enabled delivery | More than just EPC, true specialists in decommissioning

Where technology helps

How do we use technology to support this?

	Technologies Deployed	
Planning Phase	Remote working Integrated project delivery systems	3D Plant Models – Digital Twins
Offshore Early Phase	3D Scanning – Enhanced Digital Twins	Surveys / Inspections Integrated Tablets
Early & Final Rundown	Decom / Operations together using engineered workpacks	Boroscope vs Vessel Entry Understanding WBS 8 Endgame
Final Downman	Remote Navigation Aids, Solar/Battery Tech, monitoring and camera capability.	'Live' records for final verification and sign off

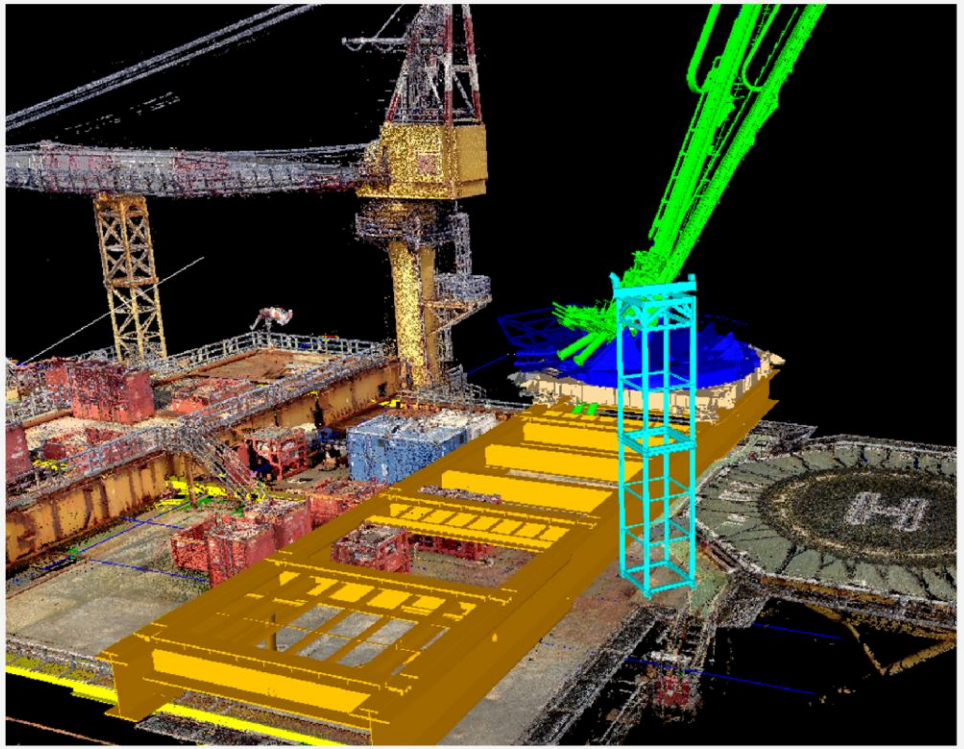

Technology **reduces technical risk**

Decommissioning mindset | Predictable delivery | Leaner, smarter integrated solutions | Technology & AI-enabled delivery | More than just EPC, true specialists in decommissioning

The reality of WBS4 decommissioning

- Drawings don't always match reality
- Isolation boundaries are more complicated than expected
- Legacy modifications emerge during execution
- Unexpected inventory or contamination is discovered
- Plant condition often poor and continuing to degrade
- Asset knowledge departing in late life

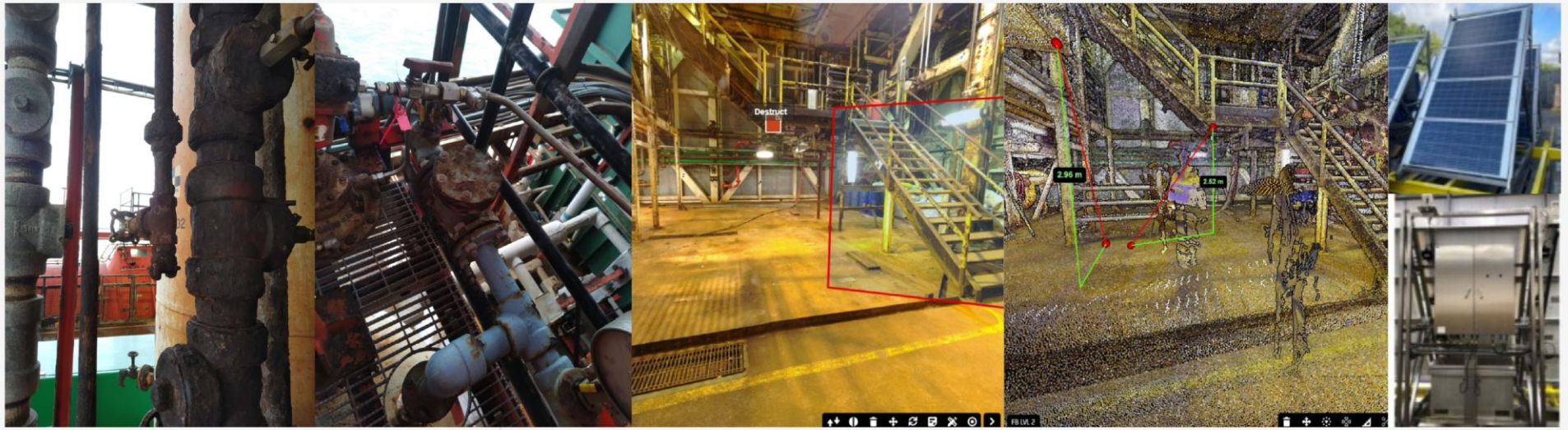

Digital twins **don't turn valves.**

Decommissioning mindset | Predictable delivery | Leaner, smarter integrated solutions | Technology & AI-enabled delivery | More than just EPC, true specialists in decommissioning

commercial@nmcenergy.com





Human capital

People make technology valuable

Technology x Experience x Collaboration =
Safe and Efficient Decommissioning

- Knowledge retention from late life operations teams
- Experienced engineers from previous decommissioning campaigns
- Cross-discipline collaboration – understand the full process
- Mentor younger engineers
- Capturing lessons and good practice before expertise leaves the industry

Technology helps us to understand,
people make it happen

The Future & Key Takeaways

NMC ENERGY

Better Technology
Improved Visual to Digital Capture / Integration with Asset Tags and Data
Clearer faster models with electronically integrated legacy information

Better Data
Plans informed by Operational Experience and Decommissioning Expertise
AI assistance in generation

Better Knowledge Transfer
Tools in hand offshore to inform the delivery and completion of the work
Live modelling of Progress, information tailored for the next phase

1 **Maintain Data**
Institutional and operational knowledge of the facilities is vital

2 **Plan for the Life Cycle**
Make time to plan around the full WBS to optimise the process

3 **Technology**
Streamline workflows / optimise handovers – use where it adds value and saves time

4 **People**
Human Intelligence (experience/ asset knowledge) is equally, if not more, important. – plan to retain the right knowledge

Technology helps us to understand, **people make it happen**

Decommissioning mindset | Predictable delivery | Leaner, smarter integrated solutions | Technology & AI-enabled delivery | More than just EPC, true specialists in decommissioning

NMC ENERGY

THANKS

commercial@nmcenergy.com
nmcenergy.com